RENOGY
TRUSTED ENERGY SOLUTIONS

Rover 2 Pro Compact MPPT Charge Controller with Bluetooth

RCC-M10040-B2-G1/RCC-M10050-B2-G1

Description

Rover 2 Pro is a compact MPPT solar charge controller built for reliable Off-Grid power. Up to 47% smaller than the previous generation, it fits easily in RVs, boats, and tight electrical compartments.

Built-in Bluetooth and an LCD screen provide real-time monitoring and control with no extra modules required. With 97% peak conversion efficiency and an advanced MPPT algorithm that excels in low-light conditions, Rover 2 Pro helps maximize solar harvest throughout the day.



Key Features

- **Up to 47% Smaller Than Previous Gen**

Free up valuable space for batteries, inverters, and other system components.

- **Built-In LCD and Bluetooth**

Monitor and manage your system more conveniently at home or on the go.

- **High-Efficiency MPPT Charging**

97% peak conversion efficiency and an advanced MPPT algorithm maximize solar harvest in changing light conditions.

- **Parallel Expansion**

Expand charging capacity with automatic load sharing for greater system flexibility.

- **CAN Connectivity for RV-C Systems**

Simplify system integration and enable centralized management across compatible RV power components.

- **Broad System Compatibility**

Supports lithium, AGM, gel, flooded, and user-defined battery profiles, with automatic voltage detection for compatible system configurations.

Module Diagram

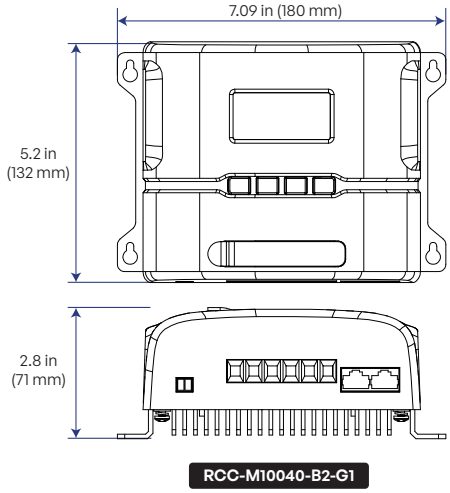

RCC-M10040-B2-G1

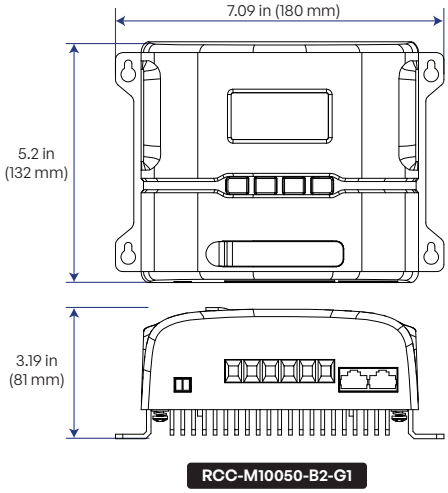

RCC-M10050-B2-G1

Technical Specifications

Electrical Data

Model	RCC-M10040-B2-G1	RCC-M10050-B2-G1
Battery Type	Lithium, AGM, Gel, Flooded, and User Profile	Lithium, AGM, Gel, Flooded, and User Profile
System Voltage	12/24V	12/24V
Rated Charge Current	40A	50A
Input Voltage Range	15-100VDC	15-100VDC
Max Solar Input Voltage	100VDC	100VDC
Max Solar Input Power	12V/600W, 24V/1,200W	12V/750W, 24V/1,500W
Max MPPT Tracking Efficiency	99%	99%
Max Conversion Efficiency	97%	97%
Temperature Compensation	-3mV/°C/2V	-3mV/°C/2V
Self Consumption	≤0.5W	≤0.5W

General Data

Communication	Built-In Bluetooth, RS485, RV-C	Built-In Bluetooth, RS485, RV-C
Operating Temperature Range	-30°C to 65°C	-30°C to 65°C
Storage Temperature Range	-35°C to 75°C	-35°C to 75°C
Humidity Range	0-95% (NC)	0-95% (NC)
Terminal Size	6 AWG	6 AWG
Cooling	Natural Cooling	Natural Cooling
Ingress Protection	IP32	IP32
Altitude	<3,000m	<3,000m

Mechanical Data

Dimensions	7.09 x 5.2 x 2.8in / 180 x 132 x 71mm	7.09 x 5.2 x 3.19in / 180 x 132 x 81mm
Weight	2.2 lbs / 1kg	2.65 lbs / 1.2kg
Certification	RCM, FCC, CE, UKCA, ICID, RoHS, REACH, TSCA / CA65, TELEC, RF, R10	RCM, FCC, CE, UKCA, ICID, RoHS, REACH, TSCA / CA65, TELEC, RF, R10
Warranty	3-Year	3-Year

Renogy and any of its affiliates have reserved the right to make any modifications to the information on this data sheet without notice.
It is our goal to supply our customers with the most recent information regarding our products.

These data sheets can be found in the downloads section of our website, www.renogy.com.